CITY OF PALMER
ACTION MEMORANDUM NO. 14-030

Subject: Authorize the City Manager to Negotiate and Execute a Utility Extension Agreement with the Matanuska Susitna Borough for the Extension of City Water Utility Service to the Valley Pathways School

Agenda of: April 8, 2014

Council Action: Authorized

Approved for presentation by:

City Manager Douglas B. Griffin
City Attorney _____
City Clerk _____

Certification of Funds:

Total amount of funds listed in legislation: $ 0

This legislation (√):

X Has no fiscal impact

Creates:

____ A negative fiscal impact in the amount of: $ _____

____ A positive fiscal impact in the amount of: $ _____

____ Funds are budgeted.

Funds are budgeted from this (these) line item(s):

a) ➢ $ _____

b) ➢ $ _____

a) Funds originally budgeted in line item : $ _____
Difference in budgeted funds: $ _____

b) Funds originally budgeted in line item : $ _____
Difference in budgeted funds: $ _____

____ Funds are not budgeted.

Budget amendment required in the total amount of: $ _____

Affected line item(s):

➢ $ _____

➢ $ _____

➢ $ _____

____ General fund unassigned balance (after budget modification) $ _____

____ Enterprise unrestricted net position (after budget modification) $ _____

Director of Finance signature certifying funds: _____

Attachment(s):

- Draft Utility Extension Agreement
- Project Location Map
- Water Supply Plan and General Notes and Details

Summary statement: The Matanuska Susitna Borough is building a new Valley Pathways school building on Borough property west of the Palmer West Subdivision and requires City water service for the facility. The City Council must approve the connection because it extends outside City limits (PMC 13.08.070).

The Borough's contractor will connect to the City water utility at the end of Kangaroo Court in Palmer West Subdivision, install a 12-inch diameter pipe west to Borough property, then north within an easement granted to the City of Palmer. This part of the water main will become part of the City's water distribution system. From that line, the Borough will install a 12-inch diameter service line that will extend to the new Valley Pathways school building.

The agreement requires the Borough, through its contractor, to construct the water utility extension in accordance with City standard specifications.

Administration recommendation: Approve action memorandum 14-030.

Matanuska-Susitna Borough

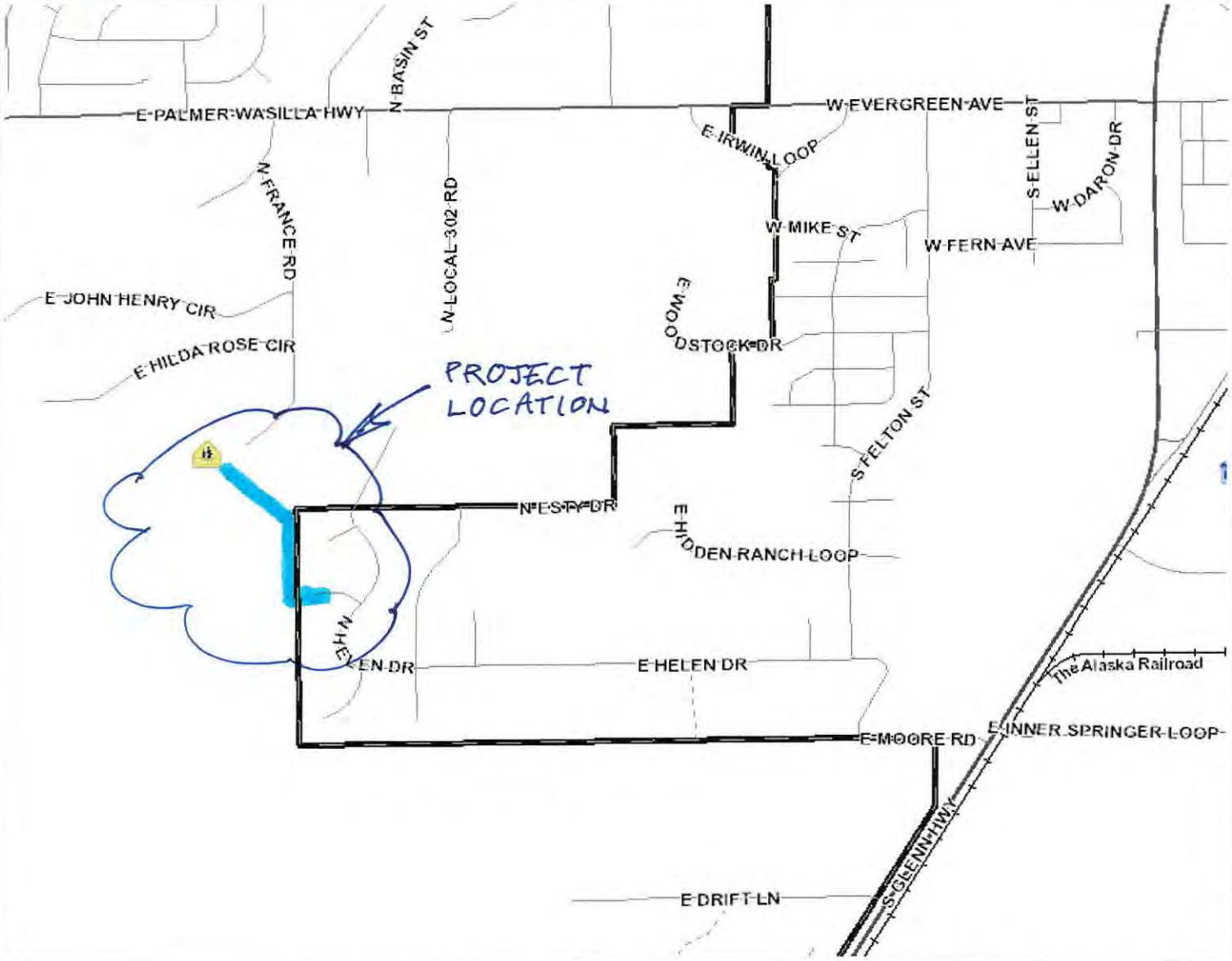

Legend

Public Facilities
- Administrative
- Animal Control
- City Hall or Courthouse
- Community Center
- Landfill or Transfer Station
- Library
- Medical
- Post Office
- Public Safety
- School

Alaska Railroad

Streets
- Highway
- Major Street
- Medium Street
- Minor Street
- Primitive Road
- Private Road

Mat-Su Borough Boundary

Incorporated Cities

1: 14,522

0.5 0 0.23 0.5 Miles

NAD_1983_StatePlane_Alaska_4_FIPS_5004_Feet

© Matanuska-Susitna Borough

Reported on 03/18/2014 04:17 PM

This map is solely for informational purposes only. The Borough makes no express or implied warranties with respect to the character, function, or capabilities of the map or the suitability of the map for any particular purpose beyond those originally intended by the Borough. For information regarding the full disclaimer and policies related to acceptable uses of this map, please contact the Matanuska-Susitna Borough GIS Division at 907-745-4801.

THIS MAP IS NOT TO BE USED FOR NAVIGATION

Notes

This map was automatically generated using Geocortex Essentials.

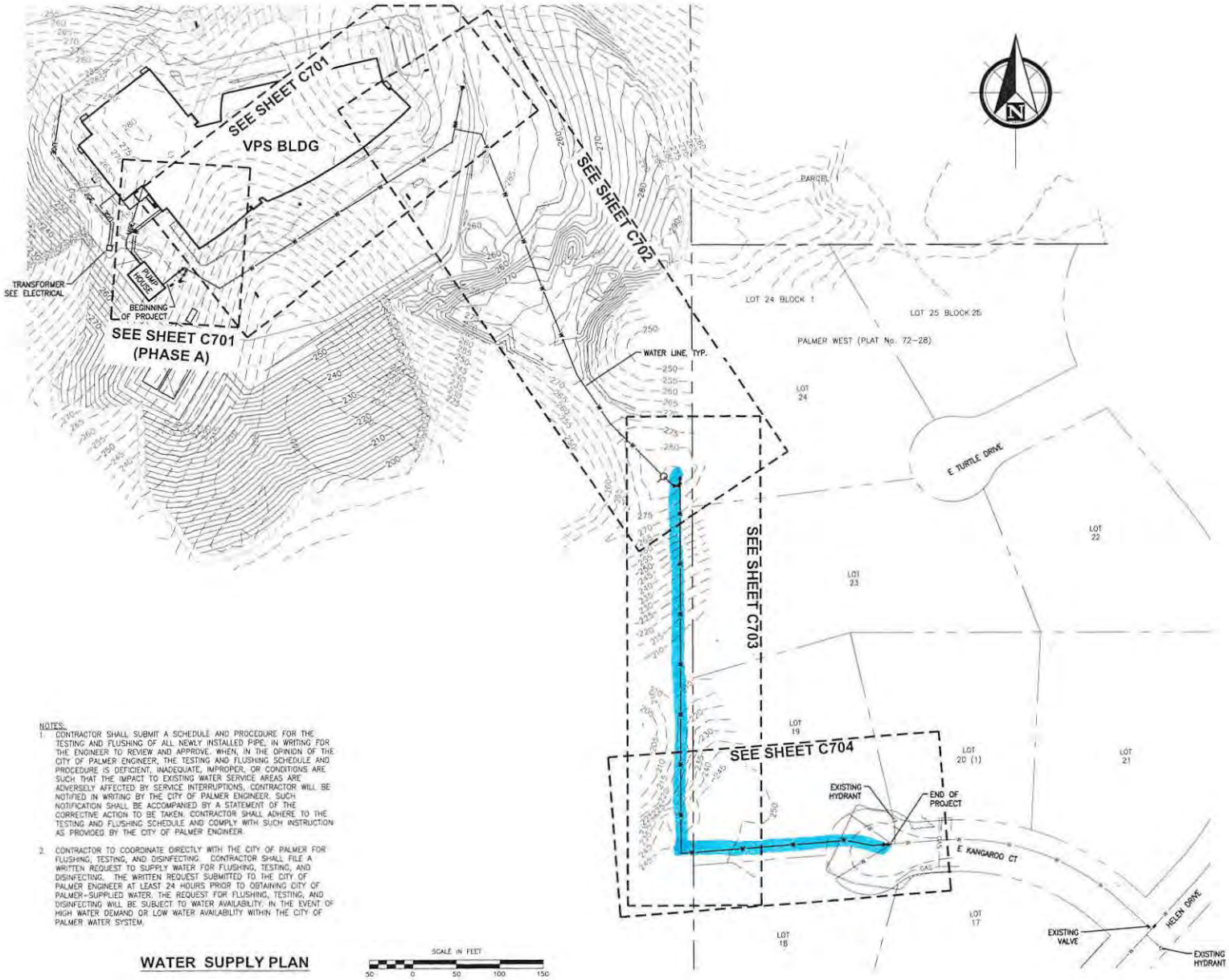

NOTES:

1. CONTRACTOR SHALL SUBMIT A SCHEDULE AND PROCEDURE FOR THE TESTING AND FLUSHING OF ALL NEWLY INSTALLED PIPE, IN WRITING FOR THE ENGINEER TO REVIEW AND APPROVE. WHEN, IN THE OPINION OF THE CITY OF PALMER ENGINEER, THE TESTING AND FLUSHING SCHEDULE AND PROCEDURE IS DEFICIENT, INADEQUATE, IMPROPER, OR CONDITIONS ARE SUCH THAT THE IMPACT TO EXISTING WATER SERVICE AREAS ARE ADVERSELY AFFECTED BY SERVICE INTERRUPTIONS, CONTRACTOR WILL BE NOTIFIED IN WRITING BY THE CITY OF PALMER ENGINEER. SUCH NOTIFICATION SHALL BE ACCOMPANIED BY A STATEMENT OF THE CORRECTIVE ACTION TO BE TAKEN. CONTRACTOR SHALL ADHERE TO THE TESTING AND FLUSHING SCHEDULE AND COMPLY WITH SUCH INSTRUCTION AS PROVIDED BY THE CITY OF PALMER ENGINEER.

2. CONTRACTOR TO COORDINATE DIRECTLY WITH THE CITY OF PALMER FOR FLUSHING, TESTING, AND DISINFECTING. CONTRACTOR SHALL FILE A WRITTEN REQUEST TO SUPPLY WATER FOR FLUSHING, TESTING, AND DISINFECTING. THE WRITTEN REQUEST SUBMITTED TO THE CITY OF PALMER ENGINEER AT LEAST 24 HOURS PRIOR TO OBTAINING CITY OF PALMER-SUPPLIED WATER. THE REQUEST FOR FLUSHING, TESTING, AND DISINFECTING WILL BE SUBJECT TO WATER AVAILABILITY. IN THE EVENT OF HIGH WATER DEMAND OR LOW WATER AVAILABILITY WITHIN THE CITY OF PALMER WATER SYSTEM.

WATER SUPPLY PLAN

SCALE IN FEET
50 0 50 100 150

95% REVIEW SET (03-18-2014)

SHEET NO.
C700

VALLEY PATHWAYS SCHOOL
Mat-Su Borough School District
WATER SUPPLY PLAN

McCOOL CARLSON GREEN
PLANNERS | ENGINEERS | DESIGNERS
ENGINEERS, INC.
1500 WEST 36th AVENUE, ANCHORAGE, AK 99503
PH 907.561.1011

JOB NO.	
PROJ MGR.	DTK
DRAWN BY	CDI
DATE	2013-04
SCALE(S)	
PME JOB NO.	121117
DESIGN	CDI

GENERAL NOTES

1. ALL CONSTRUCTION SHALL BE INSTALLED AS SPECIFIED IN THE MOST CURRENT EDITION OF THE CITY OF PALMER STANDARD SPECIFICATIONS.
2. FOR STORM WATER AND AIR POLLUTION PREVENTION AND MANAGEMENT, CONTRACTOR TO COMPLY WITH WITH ADEC AND EPA REGULATIONS FOR APDES.
3. SEE SHEET C100 FOR SURVEY CONTROL.
4. ALL UTILITY LINES STOP 5 FEET FROM THE BUILDING ON CIVIL DRAWINGS. SEE ELECTRICAL AND MECHANICAL FOR CONTINUATION OF UTILITIES INTO THE BUILDING.
5. CLEAR AND GRUB TO THE EXTENTS OF THE WATER EASEMENT. CONTRACTOR MAY CLEAR AND GRUB TO THE EXTENTS OF CONSTRUCTION AS SHOWN ON THE DRAWINGS AS REQUIRED FOR WATERMAIN INSTALLATION.
6. ALL VEGETATION IN THE AREAS NOT AFFECTED BY WORK SHALL BE PRESERVED AND PROTECTED BY THE CONTRACTOR DURING CONSTRUCTION. REPLACE VEGETATION IF DAMAGED.
7. ANY DAMAGE TO EXISTING IMPROVEMENTS, I.E. ROADS, WALKS, BUILDINGS, CAUSED BY THE CONTRACTOR SHALL BE REPAIRED AT NO ADDITIONAL COST TO THE OWNER.
8. ALL UNSUITABLE MATERIAL NOT INTENDED FOR FOR REUSE SHALL BE DISPOSED OF AT A LEGAL DISPOSAL SITE, UNLESS OTHERWISE APPROVED BY THE OWNER'S REPRESENTATIVE.
9. TOPSOIL AND SEED ALL DISTURBED AREAS UNLESS NOTED OTHERWISE.
10. THE CONSTRUCTED LOCATION OF THRUST RESTRAINT SHALL BE SHOWN ON THE RECORD DRAWINGS.
11. MAINTAIN 11 FT OF BURY OVER ALL WATER LINES.
12. MAINTAIN A MINIMUM OF TEN (10) FEET HORIZONTAL AND EIGHTEEN (18) INCHES VERTICAL SEPARATION BETWEEN WATER AND SANITARY OR STORM SEWER MAINS AND SERVICES. SANITARY AND STORM SEWER PIPE JOINTS SHALL BE PLACED AT LEAST NINE (9) FEET FROM ANY WATERLINE CROSSING.
13. MAINTAIN A MINIMUM OF 36-INCHES OF VERTICAL SEPARATION BETWEEN ANY STORM SEWER (STORM DRAIN OR FOOTING DRAIN) AND WATERLINE (MAINS OR SERVICES) OR SANITARY SEWER (MAINS OR SERVICES). IF 36-INCHES CANNOT BE MAINTAINED, PROVIDE A MINIMUM OF 4-INCH THICK INSULATION.
14. ALL WATER/SEWER PIPE INSULATION SHALL BE RIGID BOARD, HIGH DENSITY EXTRUDED POLYSTYRENE, MIN. 60 P.S.I., FOR UNDERGROUND INSTALLATIONS EQUIVALENT TO R-20 PER FOUR INCH THICK INSULATION. INSTALL INSULATION 6" ABOVE WATER LINE. STAGGER END JOINTS TWO FOOT MINIMUM.
15. HDPE PIPE CAN BE COLD BENT TO THE MINIMUM RADIUS RECOMMENDED BY THE PIPE MANUFACTURER SO AS TO ACCOMODATE SLIGHT BENDS.
16. CONTRACTOR SHALL SUBMIT, IN WRITING, FOR THE ENGINEER TO REVIEW AND APPROVE, A SCHEDULE AND PROCEDURE FOR THE TESTING AND FLUSHING OF ALL NEWLY INSTALLED PIPE. WHEN, IN THE OPINION OF THE CITY OF PALMER ENGINEER, THE TESTING AND FLUSHING SCHEDULE AND PROCEDURE IS DEFICIENT, INADEQUATE, IMPROPER, OR CONDITIONS ARE SUCH THAT THE IMPACT TO EXISTING WATER SERVICE AREAS ARE ADVERSELY AFFECTED BY SERVICE INTERRUPTIONS, CONTRACTOR WILL BE NOTIFIED IN WRITING BY THE CITY OF PALMER ENGINEER. SUCH NOTIFICATION SHALL BE ACCOMPANIED BY A STATEMENT OF THE CORRECTIVE ACTION TO BE TAKEN. CONTRACTOR SHALL ADHERE TO THE TESTING AND FLUSHING SCHEDULE AND COMPLY WITH SUCH INSTRUCTION AS DIRECTED BY THE CITY OF PALMER ENGINEER.
17. CONTRACTOR TO COORDINATE DIRECTLY WITH THE CITY OF PALMER FOR FLUSHING, TESTING, AND DISINFECTING. A REQUEST TO SUPPLY WATER FOR FLUSHING, TESTING, AND DISINFECTING SHALL BE SCHEDULED IN WRITING WITH THE CITY OF PALMER ENGINEER AT LEAST 24 HOURS PRIOR TO OBTAINING CITY OF PALMER-SUPPLIED WATER. THE REQUEST FOR FLUSHING, TESTING, AND DISINFECTING WILL BE SUBJECT TO WATER AVAILABILITY. IN THE EVENT OF HIGH WATER DEMAND OR LOW WATER AVAILABILITY WITHIN THE CITY OF PALMER WATER SYSTEM, MEETING THE CONTRACTOR'S SCHEDULE MAY NOT BE POSSIBLE.

CITY OF PALMER STANDARD DETAILS

#20-1 - TYPICAL SECTIONS FOR 20'/24' STRIP PAVING AND GRAVEL STREETS.
#40-1 - RESURFACING DETAIL TYPICAL GRAVEL SECTION
#40-2 - RESURFACING DETAIL TYPICAL BITUMINOUS SURFACE TREATMENT
#50-5 - MANHOLE HEIGHTS
#50-6 - MANHOLE STEP (ALTERNATE)
#50-12 - WATERTIGHT MANHOLE RING
#60-4 - TYPICAL VALVE BOX
#60-5 - THAW PIPES FOR "L" BASE HYDRANT
#60-6 - SINGLE PUMPER "L" BASE HYDRANT ASSEMBLY
#60-8 - TYPICAL HYDRANT GUARD POST

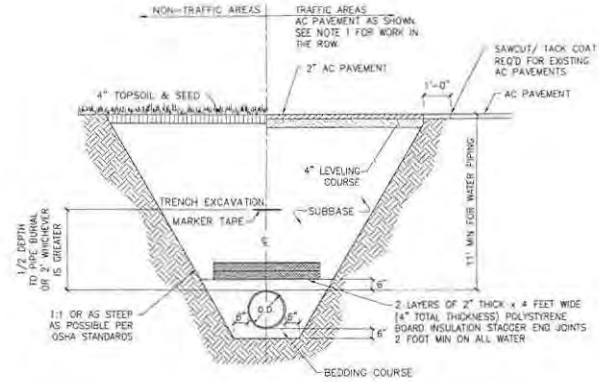

NOTES:
1. MATCH EXISTING SURFACING TYPE IN ROW. SEE COP DETAIL 40-1 FOR GRAVEL SECTION.

1 / C705 TYPICAL TRENCH SECTION

NTS

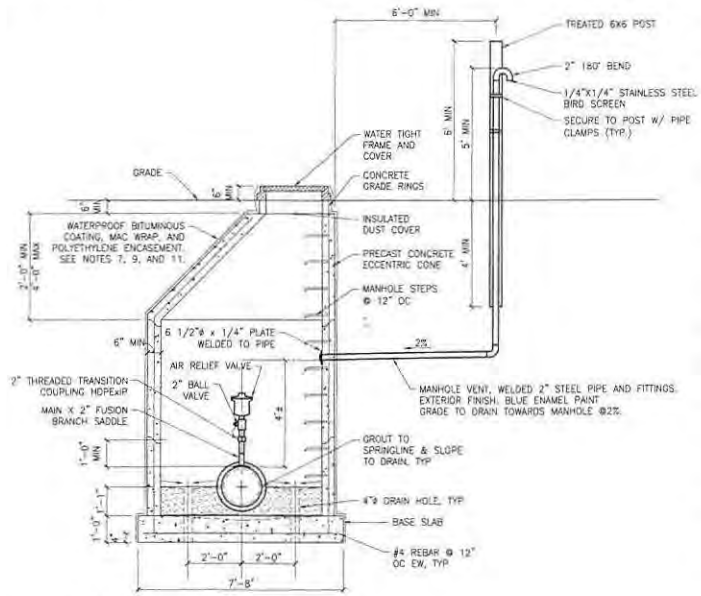

NOTES:
1. USE AT LEAST ONE 6" ADJUSTING RING.
2. RUNGS TO BE PLACED 12" O.C. ON UNOBSTRUCTED SIDE OF MANHOLE. LAST RUNG SHALL BE 18" MAX FROM BOTTOM OF MANHOLE, AND TOP RUNG SHALL BE 6" MAXIMUM FROM TOP OF CONE. IF UNOBSTRUCTED SIDE NOT AVAILABLE, LAST RUNG SHALL BE PLACED 6" OVER SMALLEST PIPE.
3. REFER TO A.S.T.M. C-478 FOR DESIGN REQUIREMENTS AND C-478-89 FOR MINIMUM STEEL FOR BARREL. ALL MANHOLE SECTIONS SHALL CONFORM TO ASTM C-478.
4. STEEL REQUIRED FOR BARREL SHALL CONFORM TO ASTM C-478. EMBED STEEL IN BASE SO THAT FIRST BARREL SECTION IS CONNECTED WITH BASE.
5. BLOCKOUT MUST BE FORMED.
6. PLASTER PIPE TO VAULT CONNECTIONS AND INTERIOR AND EXTERIOR OF ALL JOINTS WITH NON-SHRINKING GROUT. SEAL LIFTING HOLES INSIDE AND OUT.
7. COAT ALL EXTERNAL CONCRETE SURFACES OF MANHOLE WITH WATERPROOF BITUMINOUS COATING.
8. "RAM-NEK" OR EQUAL AND PRIME BARREL JOINTS. HEAT "RAM-NEK" AND SEAL SURFACES BEFORE FINAL ASSEMBLY.
9. SEAL MANHOLE JOINTS WITH "MAC WRAP" EXTERIOR PIPE JOINT SEALER OR APPROVED EQUAL, AFTER MANHOLE HAS BEEN WATER PROOFED. (TYP ALL).
10. INSTALL INFI-SHIELD EXTERNAL UNI-BAND SEAL OVER FRAME, GRADE RINGS, AND TOP OF CONE.
11. WRAP EXTERIORS OF MANHOLE W/ THREE LAYERS OF 8-MIL THICK POLYETHYLENE ENCASEMENT MATERIAL AFTER INSTALLING "MAC WRAP" AND INFI-SHIELD.
12. MANHOLE SHALL HAVE MINIMUM OF ONE (1) SIX-INCH (6") GRADE RING.
13. FOUNDATION: EXCAVATE TO A MINIMUM DEPTH OF 12" BENEATH THE SLAB BASE. COMPACT SUBGRADE, TO CITY OF PALMER SPECIFICATIONS REQUIREMENTS. PLACE AND COMPACT 12" THICK LEVELING COURSE BENEATH THE SLAB BASE, TO CITY OF PALMER SPECIFICATIONS.
14. BACKFILL AROUND MANHOLE WITH NFS MATERIAL (3-FEET MINIMUM). BACKFILL SHALL BE INCIDENTAL TO COST OF MANHOLE INSTALLATION.

2 / C705 AIR RELIEF VAULT SECTION

NTS

95% REVIEW SET (03-18-2014)

SHEET NO. C705

VALLEY PATHWAYS SCHOOL
Mat-Su Borough School District

GENERAL NOTES AND DETAILS

P N D ENGINEERS, INC.
7524 W. 98th
Anchorage, Alaska 99515
Ph: 907.561.5011

McCOY CARLSON GREEN

A.S.N.:	PND JOB NO: 121117
PROJ. MGR: DTR	DRAWN: CEH
PROJECT NO: 121117	
DATE: 3-17-14	
REVISIONS:	